BOBRICK

Technical Data

ConturaSeries® SURFACE-MOUNTED SANITARY NAPKIN DISPOSAL

B-270

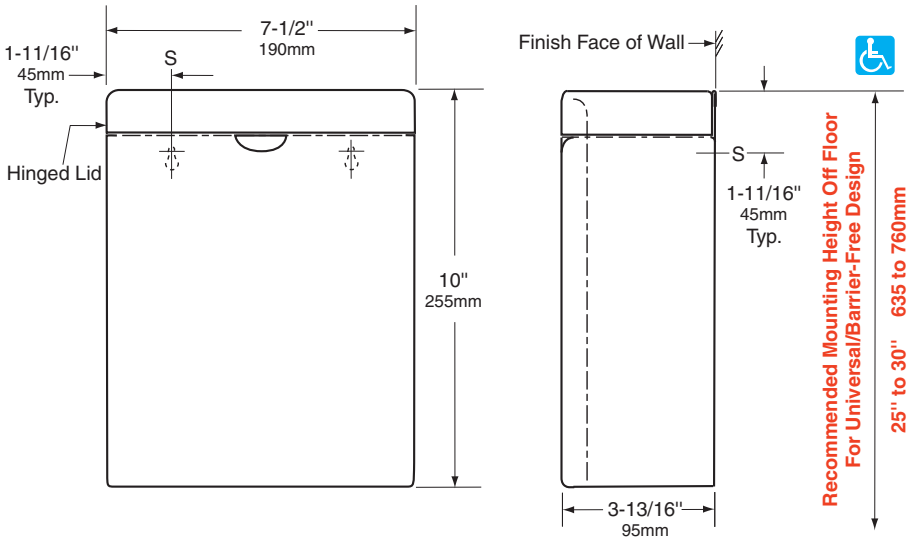

MATERIALS:

Container — 18-8 S, type-304, 22-gauge (0.8mm) stainless steel. All-welded construction. Exposed surfaces have satin finish. Integral finger depression for opening cover. Front of container has same degree of arc as front of cover and other Bobrick ConturaSeries washroom accessories. Radius on side edges of container match corners and edges of cover and other ConturaSeries accessories.

Cover — 18-8 S, type-304, 22-gauge (0.8mm) stainless steel with satin finish. Drawn, one-piece, seamless construction. Front of cover has same degree of arc as front of container and other Bobrick Contura Series washroom accessories. Radius on corners and edges of cover match side edges of container and other Contura Series accessories. Secured to container with a full-length stainless steel piano-hinge.

OPERATION:

Cover flips up for disposal of sanitary napkins and for servicing container. Disposable paper liners for the container are available as an optional accessory: order Bobrick Part No. 270-12.

INSTALLATION:

For partitions with particle-board or other solid core, secure with two #8 x 3/4" (4.2 x 19mm) sheet-metal screws (not furnished) at all points indicated by an *S*, or provide through-bolts, nuts, and washers.

For hollow-core metal partitions, provide solid backing into which sheet-metal screws can be secured. If two units are installed back-to-back, then provide threaded sleeves and machine screws for the full thickness of partition.

For masonry walls, provide fiber plugs or expansion shields for use with sheet-metal screws, or provide 3/16" (5mm) toggle bolts or expansion bolts.

For plaster or dry wall construction, provide concealed backing to comply with local building codes, then secure unit with sheet-metal screws.

SPECIFICATION:

Surface-mounted sanitary napkin disposal shall be type-304 stainless steel with all-welded construction; exposed surfaces shall have satin finish. Front of sanitary napkin disposal shall have same degree of arc and match other Bobrick ConturaSeries accessories in the washroom. Radius on corners and edges of sanitary napkin disposal shall complement other Bobrick ConturaSeries washroom accessories. Cover shall be drawn, one-piece, seamless construction and secured to container with a full-length stainless steel piano-hinge. Container shall have integral finger depression for opening cover.

Surface-Mounted Sanitary Napkin Disposal shall be Model B-270 of Bobrick Washroom Equipment, Inc., Clifton Park, New York; Jackson, Tennessee; Los Angeles, California; Bobrick Washroom Equipment Company, Scarborough, Ontario; Bobrick Washroom Equipment Pty. Ltd., Australia; and Bobrick Washroom Equipment Limited, United Kingdom.

The illustrations and descriptions herein are applicable to production as of the date of this Technical Data Sheet.
The manufacturer reserves the right to, and does from time to time, make changes and improvements in designs and dimensions.

Revised 4/27/11 Printed in U.S.A.
© 2011 by Bobrick Washroom Equipment, Inc.