Guide for Ordering Replacement Locks and Keys for Bobrick Washroom Equipment

BUILDING VALUE SINCE 1906

The same lock is used on variations of a basic cabinet, such as cabinets with skirts, cabinets with optional features designated by suffix numbers or variations in soap valves, door, depth of waste receptacle, finish; or any other modifications which would not affect the lock.

All models keyed alike with Bobrick CAT-74 Key, P/N 330-43, except for security, vendor coin boxes have Key P/N 352-112. If lock with CAT-118 Key is ordered, use P/N 352-122. A BobKey is included with soap vessels and theft-resistant spindles.

Model Number	Lock & Key
B-254	39003-21
B-262	352-100
	2621-8 (Knob Latch)
B-2621	2621-8 (Knob Latch)
B-26212	352-100
B-263	263-39
B-2012, B-2013	2012-41
B-2706 (5)	383257 (Door)
	3706-15 (Security Lock)
	3706-214
B-2746	2746-9
B-2860	3500-100
B-2888	388-42
	2621-8 (Knob Latch)
B-2890	2890-17 (lock and key)
	2890-41 (key only)
B-2892	2892-36
B-2974	2974-100
B-29744	2974-100
B-301	301-19
B-306.MBLK	305-19.MBLK
B-3013	388-42
B-3013.MBLK	288-42.MBLK
B-3091	388-42
B-3092	388-42
B-30919	388-42
B-30929	388-42
B-3094	353-25
B-347 Series	314370-22 (Old Knob Latch) 3803-5
B-353	39003-21
	314370-22 (Knob Latch)
B-354	39003-21
	314370-22 (Knob Latch)
B-357 Series	314370-22 (Old Knob Latch)
	3803-5 (Top & Bottom)
B-3570 Series	39003-21
	314370-22 (Knob Latch)
B-3479.MBLK, B-3579.MBLK	388-42.MBLK (upper), 3803-5.MBLK (lower)
B-359	352-100
	2621-8 (Knob Latch)
B-3588, B-35883	388-42 (Lock & Key)
	2621-8 (Knob Latch)
B-3588.MBLK, B-35883.MBLK	288-42.MBLK
B-35633.MBLK	38030-20.MBLK
B-35639.MBLK	38030-20.MBLK
B-35643.MBLK	38030-20.MBLK
B-35649.MBLK	38030-20.MBLK
B-359033, B-359039	3013-112 (Lock & Key)
B-359033.MBLK	38030-20.MBLK
B-359039.MBLK	38030-20.MBLK
B-369	369-42 (Knob Latch)
	319148
B-3644	3944-41
B-3706 (5)	383257 (Door Lock)
	3706-15 (Security Lock)
	3706-214 (Coin Box)

Model Number	Lock & Key
B-37063 (5)	383257 (Door Lock)
	3706-15
	3706-214
B-37063.MBLK C	383257.MBLK (Door Lock)
B-37063.MBLK 25	383257.MBLK (Door Lock)
B-370634 (5)	383257 (Door Lock)
	3706-15
	3706-214
	3706-15
	3706-214
B-370634.MBLK 25	383257.MBLK (Door Lock)
B-370634.MBLK C	383257.MBLK (Door Lock)
B-3803 Series	39003-21
B-3803.MBLK	38030-20.MBLK
B-38030 Series	38030-304 (Door Lock & Key)
	38030-318 (Lock, Key, & Mtg Plate Assy)
B-38032.MBLK	38030-20.MBLK
B-38033	38030-304 (Lock & Key)
B-38034.MBLK	38030-20.MBLK
B-380349.MBLK	38030-20.MBLK
B-386	388-42
B-3888	388-42
	2621-8 (Knob Latch)
B-39003.MBLK	38030-20.MBLK
B-39003 Series	39003-21
B-3944 Series	330-41 (Door: 2006 & earlier)
	330-148 (Old Door Knob Latch)
	3944-30 (Door, Convertible: 2007 & newer)
	3944-41 (Waste Receptacle)
	3944-143 (New Knob Latch Waste)
B-3961	38077-15 (Old Door)
	3500-100 (New Door)
	3944-41 (Receptacle)
	3944-143 (Knob Latch)
B-3974	3500-100 (Door)
	3944-41 (Receptacle)
B-39747	3500-100 (Door)
	3944-41 (Receptacle)
B-3979	3500-100 (Door)
	3944-41 (Receptacle)
B-4262	4262-36
B-4288	288-42
B-4369	4369-20
B-4388	288-42
B-4706 (6)	43500-24 (Door)
	4706-175
	3706-214
B-72974	24-17 BobKey
B-9262	4369-20
B-9262.MBLK	4369-20.MBLK
B-9890	4369-20
B-9890.MBLK	4369-20.MBLK

Form No. CSD-1 r4/9/25

© 2025 by Bobrick Washroom Equipment, Inc.

Guide for Ordering Replacement Locks and Keys for Bobrick Washroom Equipment

Earlier Production with Non-Current Locks

Model Number	Lock & Key	Units Manufactured
B-288	388-19	Prior to January 1972
B-306, B-3067	305-19	
B-307, B-3077		
B-366 Series	360-48	Prior to October 1986
B-369	317893-42	Prior to September 2000
B-386, 388	288-122	Between 1/72 and 4/89

Lock & Key Reference Guide

2621-8 (Knob Latch)

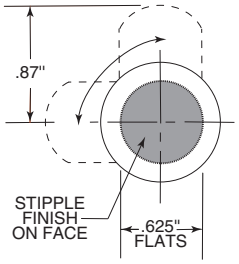

263-39

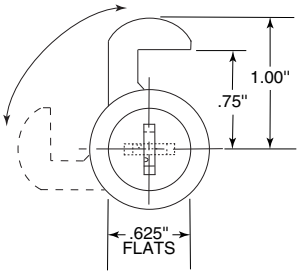

2746-9

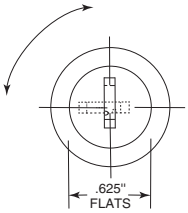

288-122

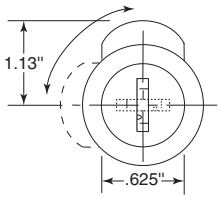

© 2025 by Bobrick Washroom Equipment, Inc.

Lock & Key Reference Guide

BUILDING VALUE SINCE 1906

288-42

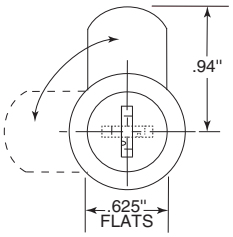

2892-36

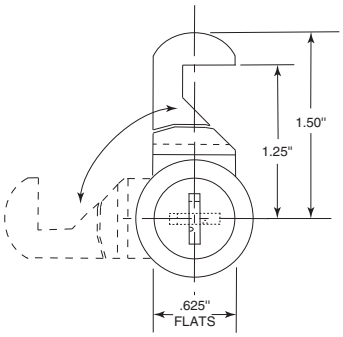

301-19

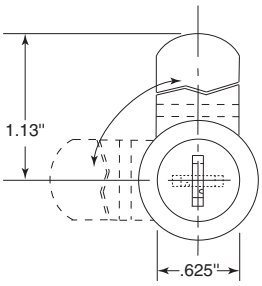

314370-22 (Knob Latch)

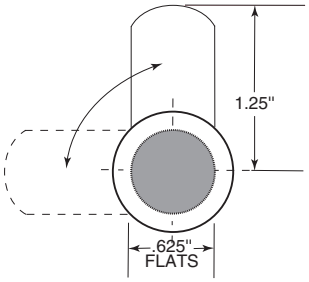

330-148 (Old Door Knob Latch)

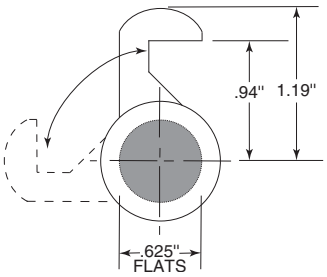

330-41 (Old Door)

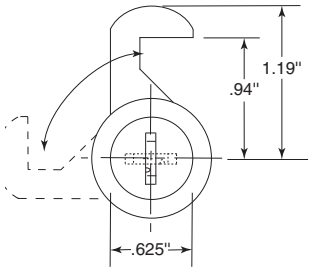

3500-100 (Door)

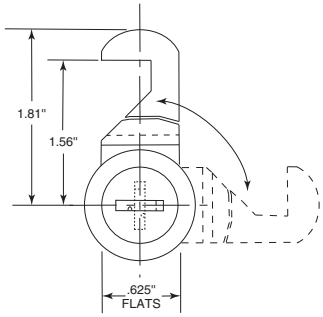

352-100

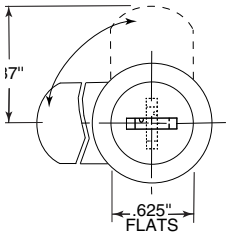

Form No. CSD-1 r4/9/25

© 2025 by Bobrick Washroom Equipment, Inc.

Lock & Key Reference Guide

BUILDING VALUE SINCE 1906

353-25

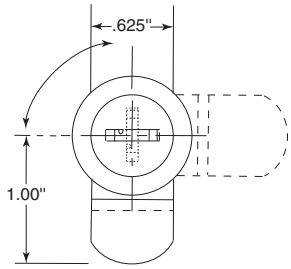

3706-144 (Coin Box)

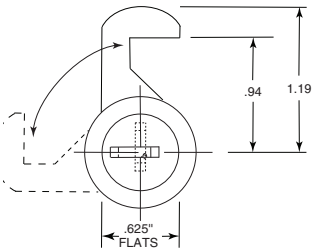

3706-175 (Security Lock) CAT Key 118

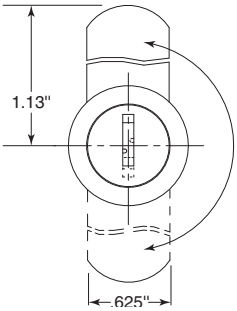

38077-15 (Towel Dispenser)

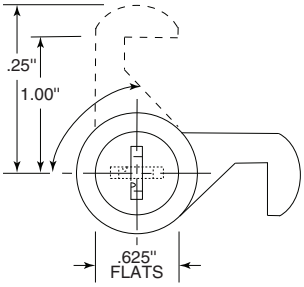

383257 (Door Lock)

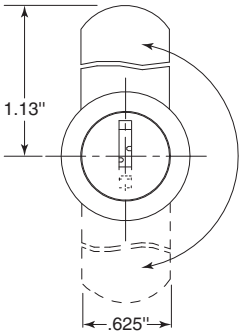

388-42

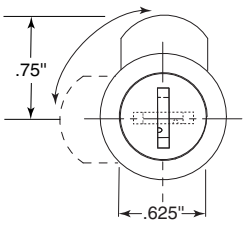

39003-21

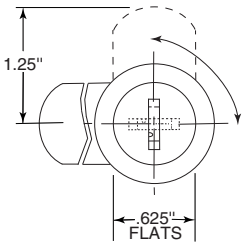

3944-143 (Knob Latch)

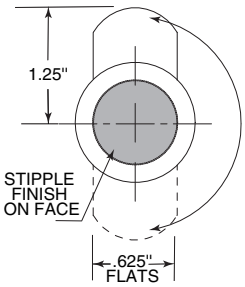

© 2025 by Bobrick Washroom Equipment, Inc.

Lock & Key Reference Guide

BUILDING VALUE SINCE 1906

3944-30
(New Door, Convertible)

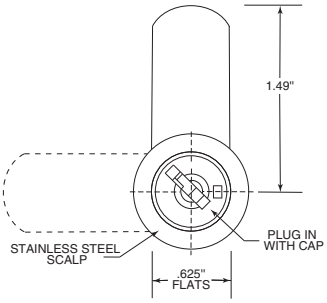

3944-41
(Waste Receptacle)

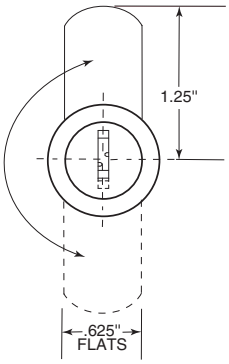

4262-36

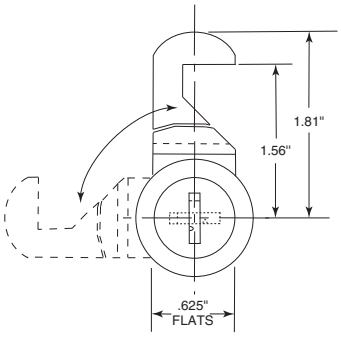

43500-24 (Door)

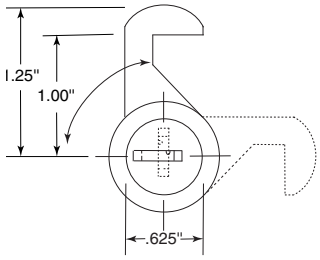

4369-20

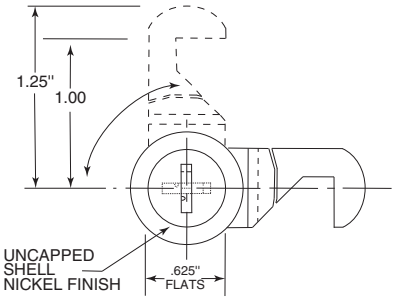

4706-175 (Security Lock)
CAT Key 118

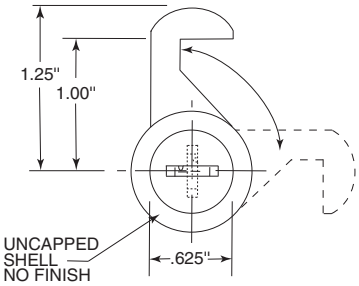

Form No. CSD-1 r4/9/25

© 2025 by Bobrick Washroom Equipment, Inc.

BUILDING VALUE SINCE 1906

Lock & Key Reference Guide

Discontinued Models

B-235	330-41
B-267	360-48
B-2793	352-100
B-2800	2800-28 (upper) 2800-48 (lower) 3500-58 (Coin Box)
B-2801	234-51 (upper) 2802X2-22 (lower)
B-2802 Series	234-51 (upper) 2802X2-22 (lower) 234-44 (Coin Box)
B-282 (3)	352-50 352-111 (Coin Box)
B-288	288-122
B-2893	2892-36
B-3017	288-122
B-304	301-19
B-31903	330-41
B-31907	330-41
B-3220	330-41
B-3226	330-41
B-323	330-41
B-330 Series	330-41
B-3300	330-41
B-3301	330-41
B-3302	330-41
B-332	330-41
B-3330	330-41
B-3336	330-41
B-334	330-41
B-347 (Before May 1994)	301-19
B-33007	330-41
B-3500 (7)	3500-100 (upper) 3500-99 (lower) 3500-58 (Coin Box)
B-3502 Series (2)	344-42 3502X2-22 (lower) 234-44 (Coin Box)
B-352 (3)	352-50 352-111 (Coin Box)
B-35907	38077-15 314370-22 (Knob Latch)
B-357 (Before May 1994)	301-19 (Seat Cover) 353-25 (Disposal)
B-360 Series	305-19 (2 required)
B-360P	305-19 (2 required)
B-36003 Series	39003-21 (2 required)
B-360039	39003-21 (2 required)
B-361	330-41
B-362	305-19
B-36203	4063-16
B-363	305-19

Discontinued Models

B-364	3944-41
B-364077	3803-5
B-3649	3944-41
B-3645	3944-41
B-36503 Series (2)	3803-5
B-366 Series	305-19
B-367 (4)	3944-41
B-36703	39003-21
B-367077	3803-5
B-368 (4)	3944-41
B-372	330-41
B-376	288-122
B-378	288-122
B-38074	38077-15
B-3807	38077-15
B-3860	360-48
B-3861	360-48
B-388	288-42
B-3900 Series	330-41 (Door) 3944-41 (Receptacle)
B-39007	38077-15
B-390074	38077-15
B-3950	305-19
B-3960	360-48 (Towel Dispenser) 3944-41 (Waste Receptacle)
B-39603	39603-15 815049 (Knob Latch)
B-396034	815049 (Knob Latch)
B-39607	38077-15
B-43500	43500-24
B-4362	4369-20
B-520	305-19 Door 3944-41 Receptacle
B-525	39003-21
B-52507	39003-21
B-52503	39003-21
B-52860	52860-21
B-590	330-41 Door
B-591	330-41 Door
B-930	305-19

(1) For added security, use 2800-101 (upper) and 2800-104 (lower); both keyed to CAT-118.
(2) For added security, use 344-120; keyed to CAT-118.
(3) For added security, use 352-120 (upper and lower); keyed to CAT-118.
(4) Can be converted to knob latch with conversion kit P/N 360-142.
(5) For added security, use 3706-175 keyed to CAT-118
(6) For added security, use 4706-175 keyed to CAT-118
(7) For added security, use 3500-101 (upper) and 3500-105 (lower); both keyed to CAT-118.

In the United States: BOBRICK WASHROOM EQUIPMENT, INC.
New York: 200 Commerce Drive, Clifton Park, NY 12065-1350 • Tel: (518) 877-7444 • Fax: (518)-877-5029
Los Angeles: 6901 Tujunga Ave, North Hollywood, CA 91605-6213 • Tel: (818) 982-9600 • Fax: (818)-503-9287
or email customerservice@bobrick.com

In Canada: BOBRICK WASHROOM EQUIPMENT COMPANY
45 Rolark Drive, Scarborough, Ontario M1R 3B1 • **Eastern Canada**: Tel: (877) 423-6555 • Fax: (877) 423-8555
• **Western Canada**: Tel: (877) 423-6444 • Fax: (877) 423-8444 or email customerservice@bobrick.com

 © 2025 by Bobrick Washroom Equipment, Inc.